PROGRAM	:	NATIONAL DIPLOMA *ENGINEERING: COMPUTER SYSTEMS* *ENGINEERING: ELECTRICAL*
SUBJECT	:	**CONTROL SYSTEMS 2**
CODE	:	**ASY211**
DATE	:	SUPPLEMENTARY EXAMINATION JULY 2019
DURATION	:	3 HOURS
WEIGHT	:	40 : 60
FULL MARKS	:	100
TOTAL MARKS	:	100

EXAMINER	:	PROF THOKOZANI C SHONGWE	
MODERATOR	:	MR DR VAN NIEKERK	2330
NUMBER OF PAGES	:	4 PAGES, INCLUDING 1 FORMULAE SHEET	

INSTRUCTIONS	:	CALCULATORS ARE PERMITTED (ONLY ONE PER STUDENT)
	:	USE ONLY THE ANSWER SHEET PROVIDED WITH THIS PAPER

INSTRUCTIONS TO CANDIDATES:

1. 100 MARKS = 100%
2. ATTEMPT ALL QUESTIONS.
3. THEORY TYPE QUESTIONS MUST BE ANSWERED IN POINT FORM BY CAREFULLY CONSIDERING THE MARK ALLOCATION.
4. QUESTIONS MAY BE ANSWERED IN ANY ORDER, BUT ALL PARTS OF QUESTION MUST BE KEPT TOGETHER.
5. ALL DIAGRAMS AND SKETCHES MUST BE DRAWN NEATLY AND IN PROPORTION.
6. ALL DIAGRAMS AND SKETCHES MUST BE LABELLED CLEARLY.
7. ALL WORK DONE IN PENCIL EXCEPT DIAGRAMS AND SKETCHES WILL BE CONSIDERED AS ROUGH WORK.
8. NOTE: MARKS WILL BE DEDUCTED FOR WORK WHICH IS POORLY PRESENTED.
9. NEGATIVE MARKING APPLIES IF YOUR ANSWER DOES NOT COMPLY WITH THE DETAIL REQUIRED AS REQUESTED IN CERTAIN QUESTIONS.

QUESTION 1

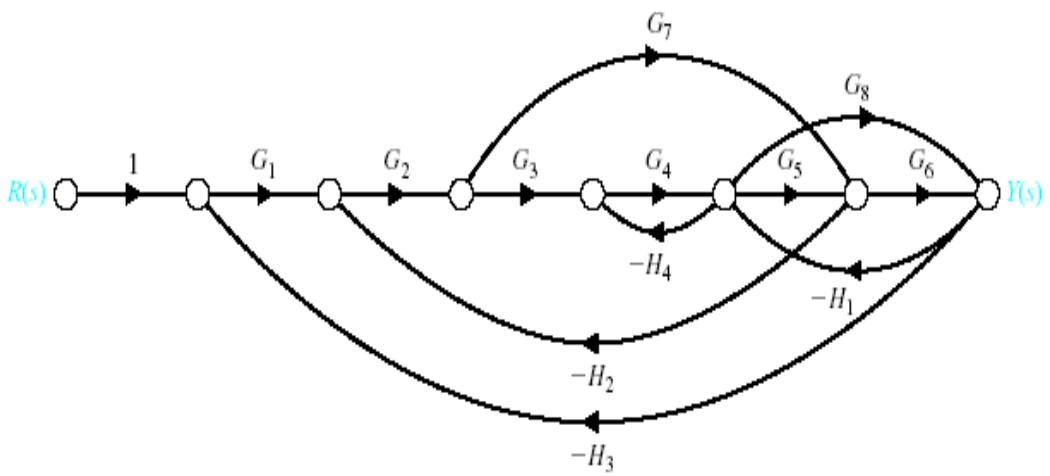

Determine the transfer function of the diagram above, using **Mason's Rule.**

[20]

QUESTION 2

a) A network has a transfer function of

$$G(p) = \frac{1}{p^2+6p+62}.$$

Determine the transient response of the network to a step input of 10 Volts and express the output as a function of time. (13)

b) Describe the concept of the decibel. (3)

[16]

QUESTION 3

Consider the passive network below and:

(a) Determine the transfer function of the passive network below in terms of R_1, R_2, L_1 and C_1. (20)

(b) Find the transient response $V_o(t)$ of the network if it is subjected to $V_i(t)$ which is a ***unit step*** input, if $R_1 = 2\ k\Omega$, $R_2 = 2\ k\Omega$, $C_1 = 0.1\ \mu F$ and $L_1 = 10\ mH$. (24)

(c) Find the transient response $V_o(t)$ of the network if it is subjected to $V_i(t)$ which is a ***unit impulse*** input, if $R_1 = 3\ k\Omega$, $R_2 = 1.5\ k\Omega$, $C_1 = 100\ nF$ and $L_1 = 10\ mH$. (20)

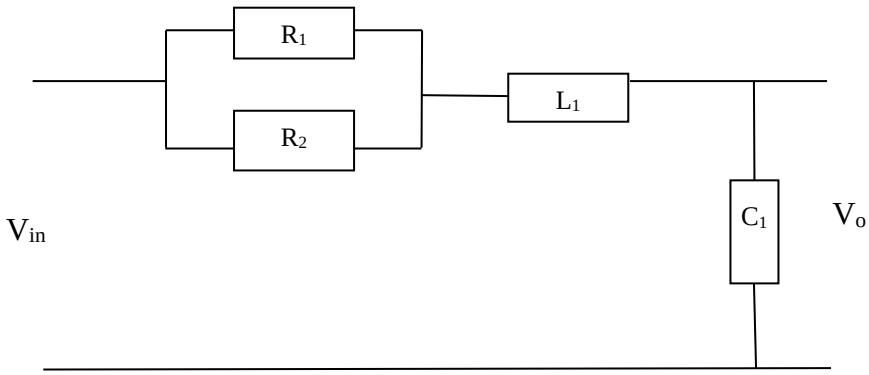

[64]

TOTAL MARKS : 100

Laplace Transforms

TIME FUNCTION f(t)	LAPLACE FUNCTION F(p)
Unit impulse	1
Unit step	$\frac{1}{p}$
Unit ramp	$\frac{1}{p^2}$
Unit parabolic	$\frac{1}{p^3}$
Exponential (e^{-at})	$\frac{1}{p+a}$
Sinusoidal ($\sin(\omega t)$)	$\frac{\omega}{p^2+\omega^2}$
Co-sinusoidal ($\cos(\omega t)$)	$\frac{p}{p^2+\omega^2}$
$\frac{1}{(n-1)!}t^{n-1}e^{-at}$	$\frac{1}{(p+a)^n}$
$e^{-at}\sin(\omega t)$	$\frac{\omega}{(p+a)^2+\omega^2}$
$e^{-at}\cos(\omega t)$	$\frac{p+a}{(p+a)^2+\omega^2}$